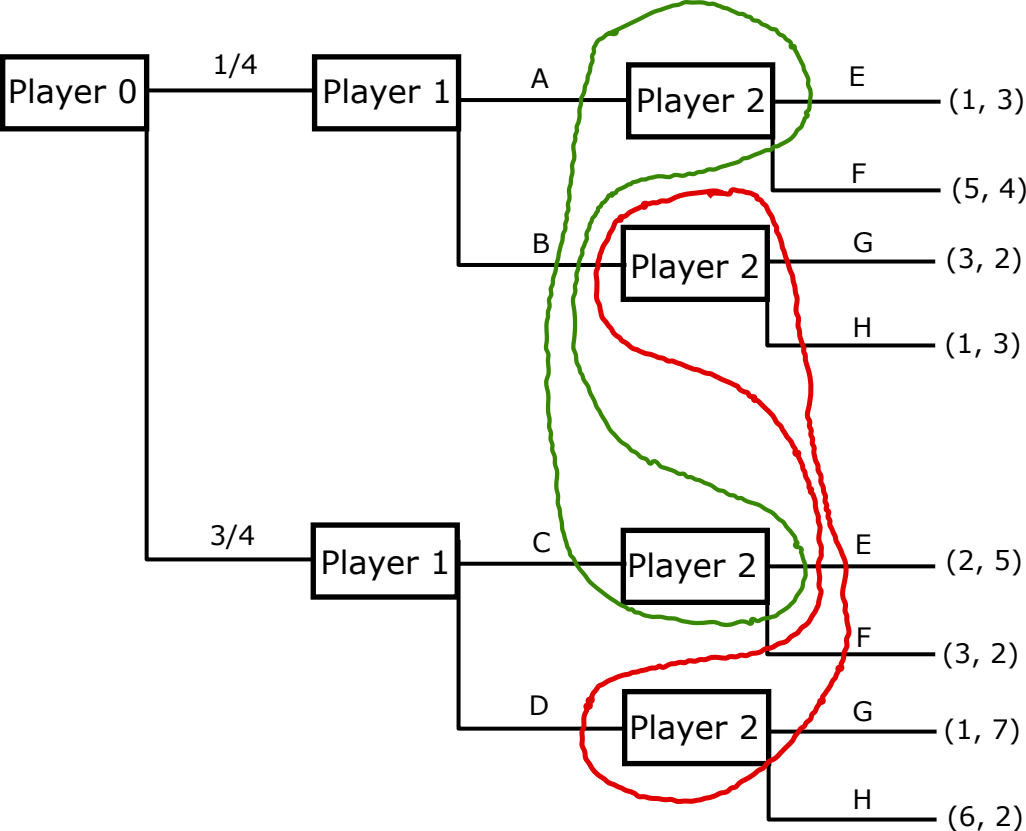
Player 0
1/4
3/4
Player 1
Player 1
A
B
C
D
Player 2
Player 2
Player 2
Player 2
E
F
G
H
E
F
G
H
(1, 3)
(5, 4)
(3, 2)
(1, 3)
(2, 5)
(3, 2)
(1, 7)
(6, 2)